AURORA WIND
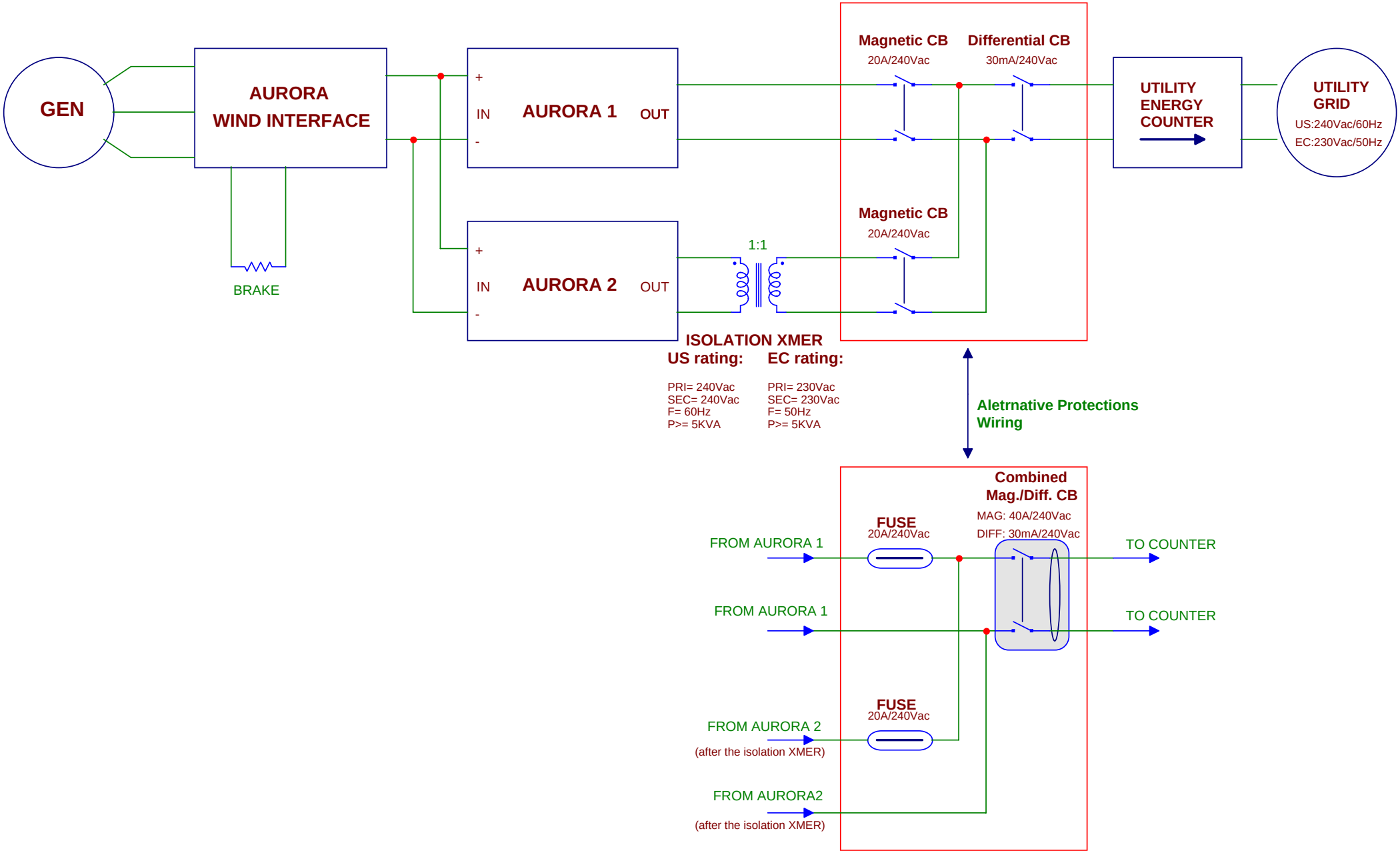
WIRING WITH TWO INVERTERS AND ONE GENERATOR